MEC

MINGSTAR ELECTRONIC CORP.

Line Filter

UU9.8 Verticac Type(Vertical)：

Dimensions：mm

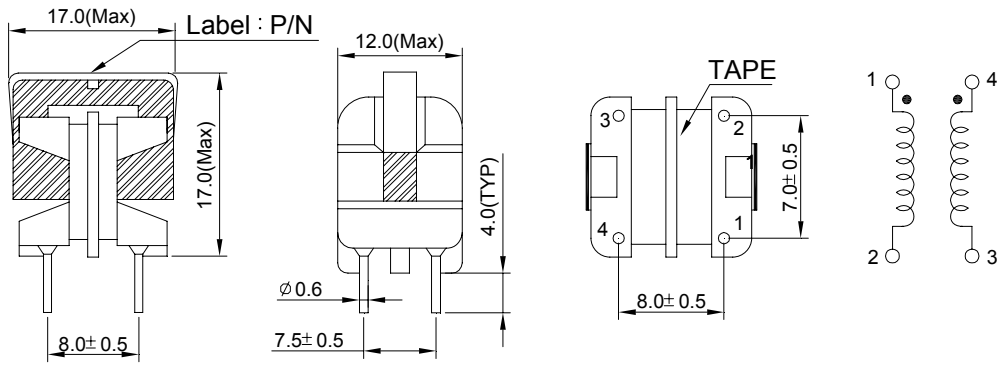

UU9.8N Horizontal Type(Horizontal)：

Dimensions：mm

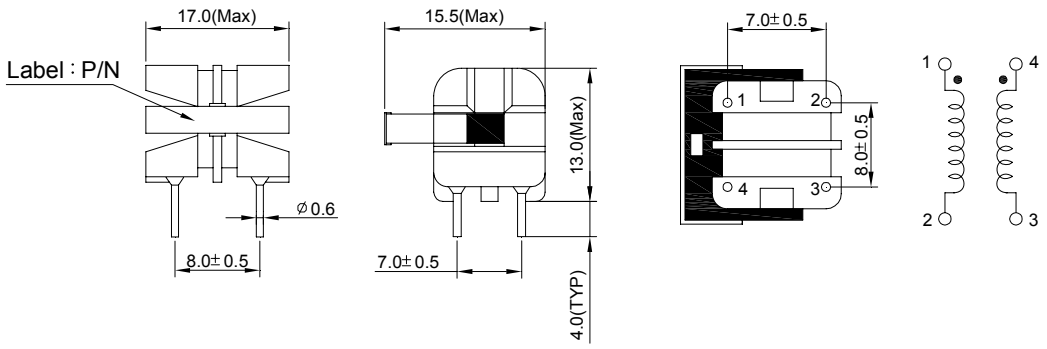

Electrical characteristics

Model	Rated current(A)	Inductance(mH)Min	DC Resistance (Ω/line)Max	Temperature rise(K)Max
UU9.8N-501	1.0	0.5	0.3	40
UU9.8N-801	1.0	0.8	0.3	40
UU9.8N-102	0.7	1.0	0.6	40
UU9.8N-172	0.7	1.7	0.6	40
UU9.8N-202	0.5	2.0	1.0	40
UU9.8N-342	0.5	3.4	1.0	40
UU9.8N-502	0.3	5.0	3.0	40
UU9.8N-802	0.2	8.0	6.0	40
UU9.8N-902	0.3	9.0	3.0	40
UU9.8N-103	0.1	10.0	8.0	40
UU9.8N-143	0.2	14.0	6.0	40
UU9.8N-183	0.1	18.0	8.0	10